Mystique 6 SKTF Gold Water Jet

72" x 32" x 22"

SKU: MYSTIQUE6SKTF-GWJ

Gold Water Jet

TECHNICAL SPECIFICATIONS	
Drain	End drain
Pump Location(s): Select 1	Std. = Standard / Alt LF/RF Optional
Bath Weight (empty)	175 lbs
Gallons to Operate	48-67
ELECTRICAL SPECIFICATIONS	
Motor/Pump	(1) 115v 20AMP GFCI Circuits
Inline Stainless Steel Heater	(1) 115v 20AMP GFCI Circuit

BATHERS: 1	
INSTALLATION	
	DECK (D)
	UNDER MOUNT (U)
•	ALCOVE (A)
	FREESTANDING (F)
	CLAWFOOT (L)
	PEDESTAL (P)

Jet & Control placement may vary

Skirt & Tile Flange - Access Panel with screws & caps

STANDARD FEATURES & ACCESSORIES for GOLD WATER JET

JETS
12 Water Massage Jets
Back Massage System(s) (6 Jets)
Accumassage Back and Neck Jets
6 Ultra Flow Jets

PUMPS
3.25 Hydropower 3-speed Pump
Quiet Pad Anti-Vibration Mounted Pump

HEATERS
Stainless Steel Electric Heater

CONTROLS
Air Switch On/Off Control(s) For Hydro Pump & Mood Light
3 Speed Massage: High, Medium or Low

PURITY
HydroClean Water Purity System
HydroCleanse

STANDARD ACCESSORIES
Mood Light
Lift & Turn Drain - White, Biscuit, Bone, Brushed Nickel, Oil Rubbed Bronze, Polished Chrome
Deluxe Cushion Pillow
Integral Tile Flange
EZ Level Adjustable Legs
FDA Recipe Non-Toxic Food & Beverage Grade Plumbing (primarily)
30 Point Quality Assurance Factory Test

REQUIREMENTS
Pump Locations: Select 1
Electrical: two 115v GFCI Circuits
Drain: Select Color / Finish
Tub should not be supported by the lip in any way. Level tub & screw or glue EZ Level adjustable legs to sub floor.
CUT OUT DIMENSIONS:
OVALS: A template will be provided
RECTANGLES: Subtract 1" to 1.5" from length & width for hole cut out size

EZ CLEAN CAST ACRYLIC LIMITED LIFETIME WARRANTY c UL us **ANSI**

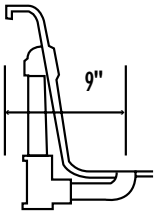

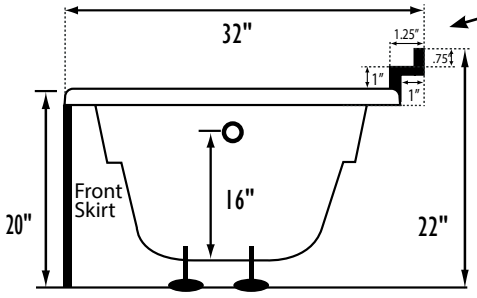

Bath includes EZ Level Legs

EZ Clean Tile Flange

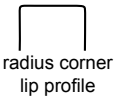

radius corner lip profile

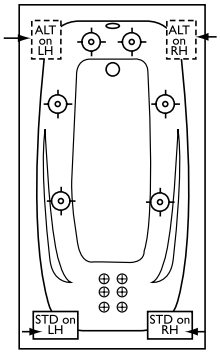

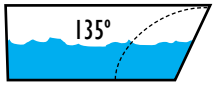

Backrest angle

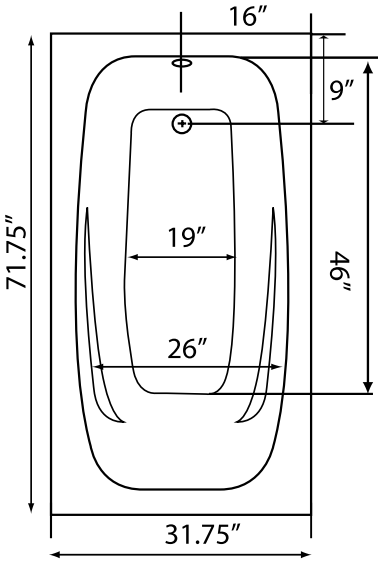

NOTE: Graphics may not be to scale. Specifications and features are subject to change without notice and are ± .25". All final measurements should be taken from **tub on site.** Access 18"x 18" or larger is required for each pump. Some pump locations and plumbing may extend beyond the perimeter of the bath.